SIZE

G 20-27-34 STANDARD SERIES

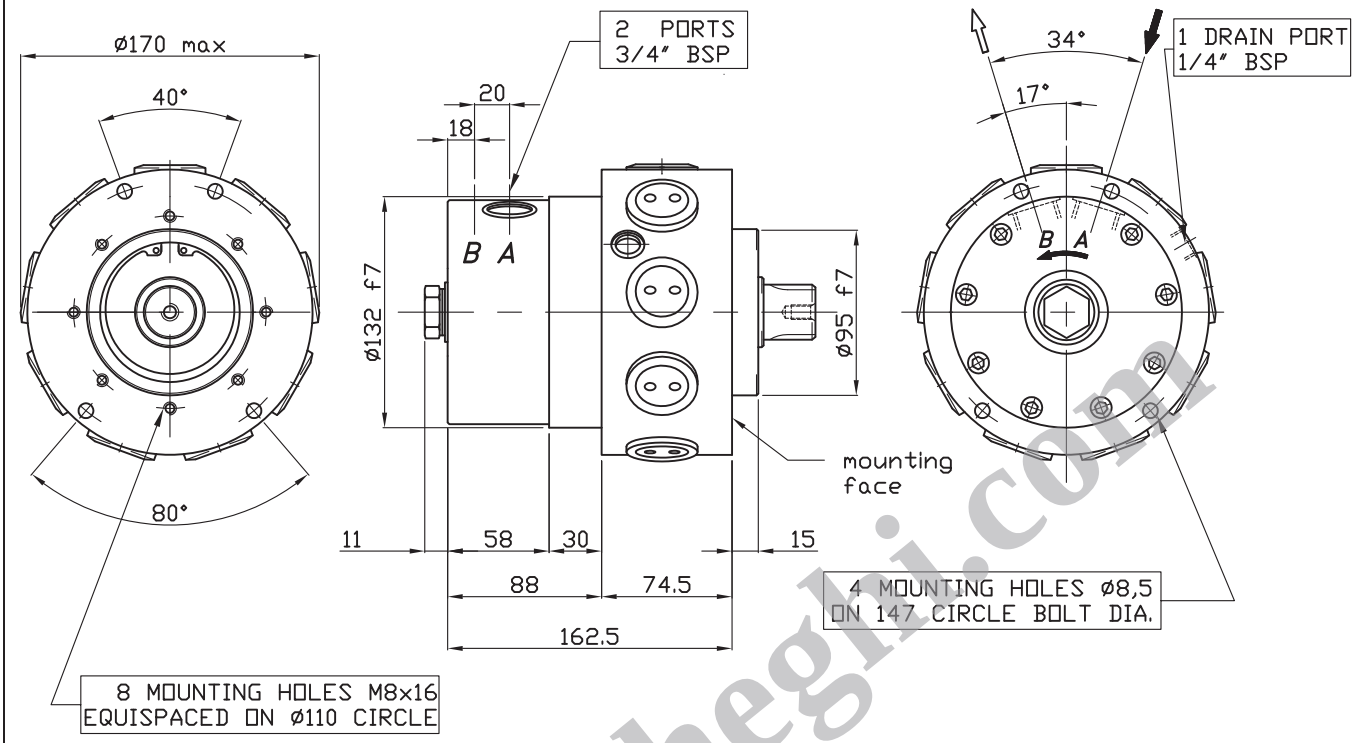

SHAFT

G 20-27-34

A0: Standard Splined Shaft	A1: Splined Shaft on request	A2: Parallel shaft on request
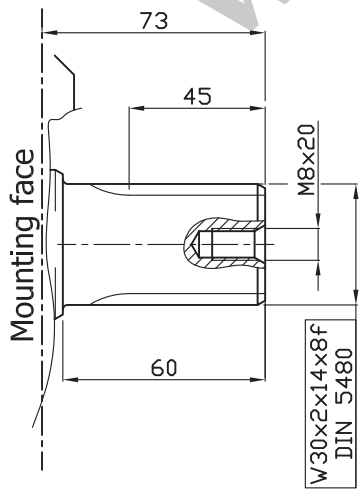	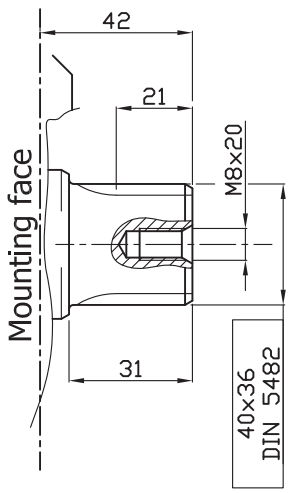	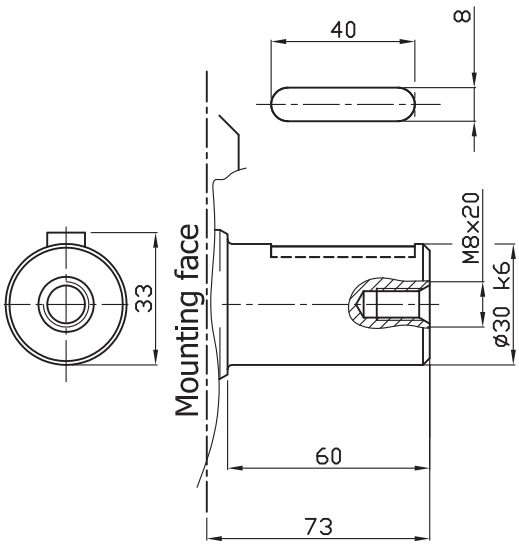

www.Lahegni.com